XL7

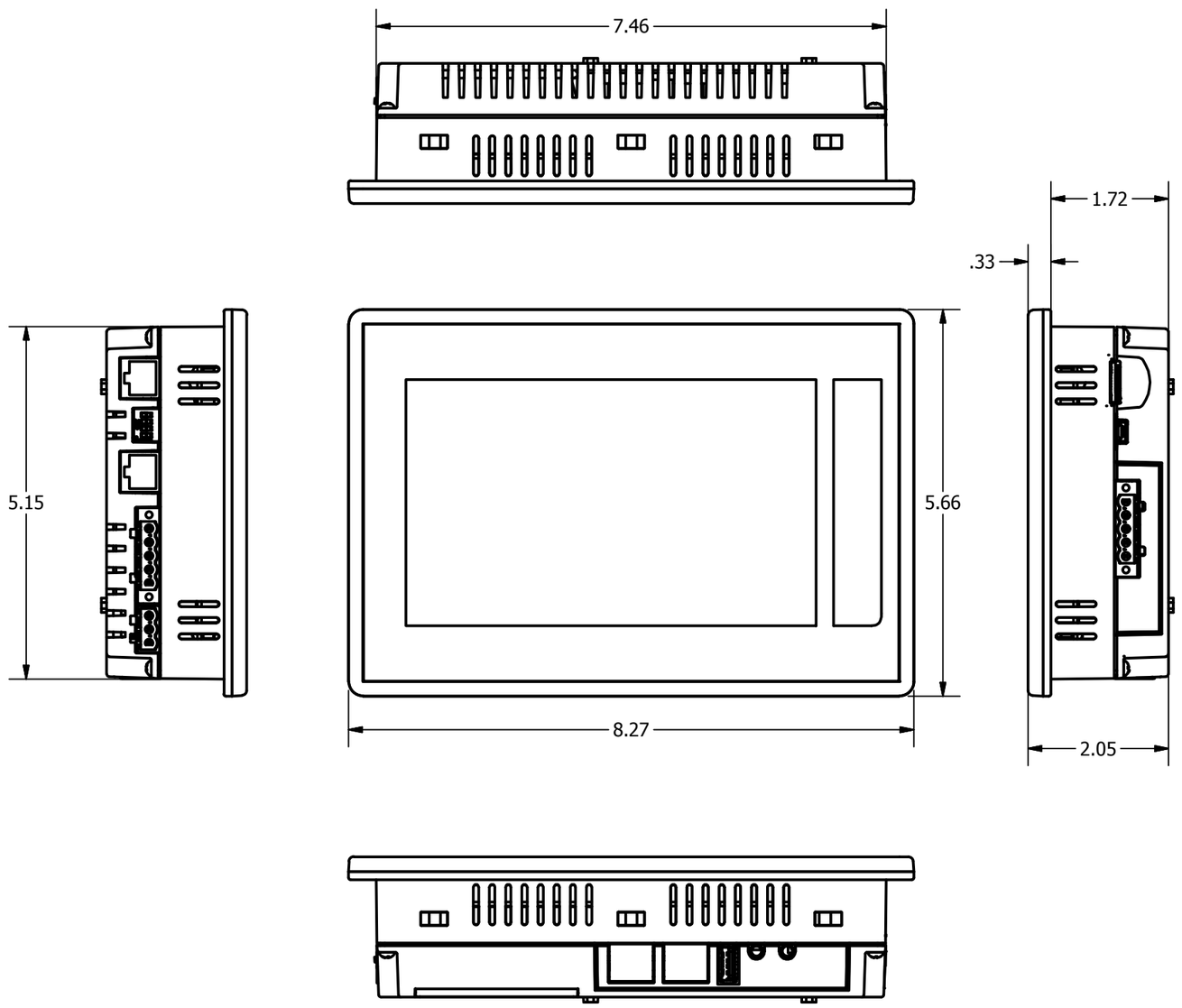

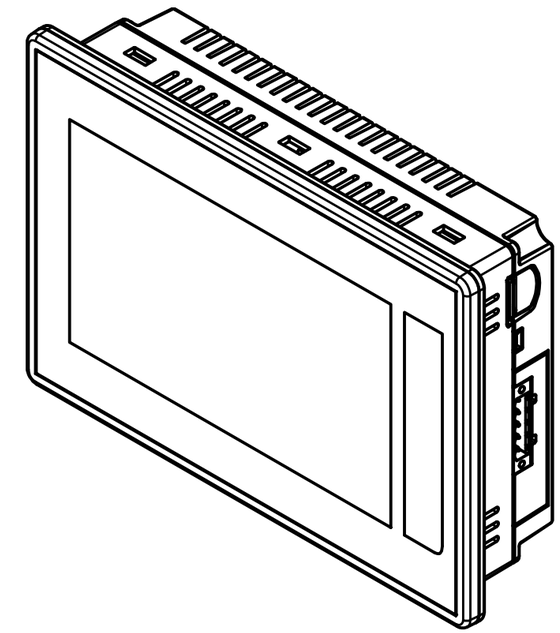

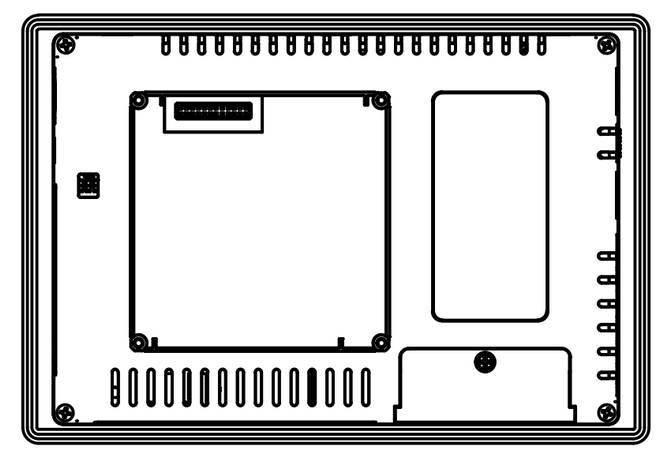

HORNER APG
59 S. STATE AVE. Indianapolis, Indiana 46201
PH: (317) 916-4274 FX: (317) 916-4280